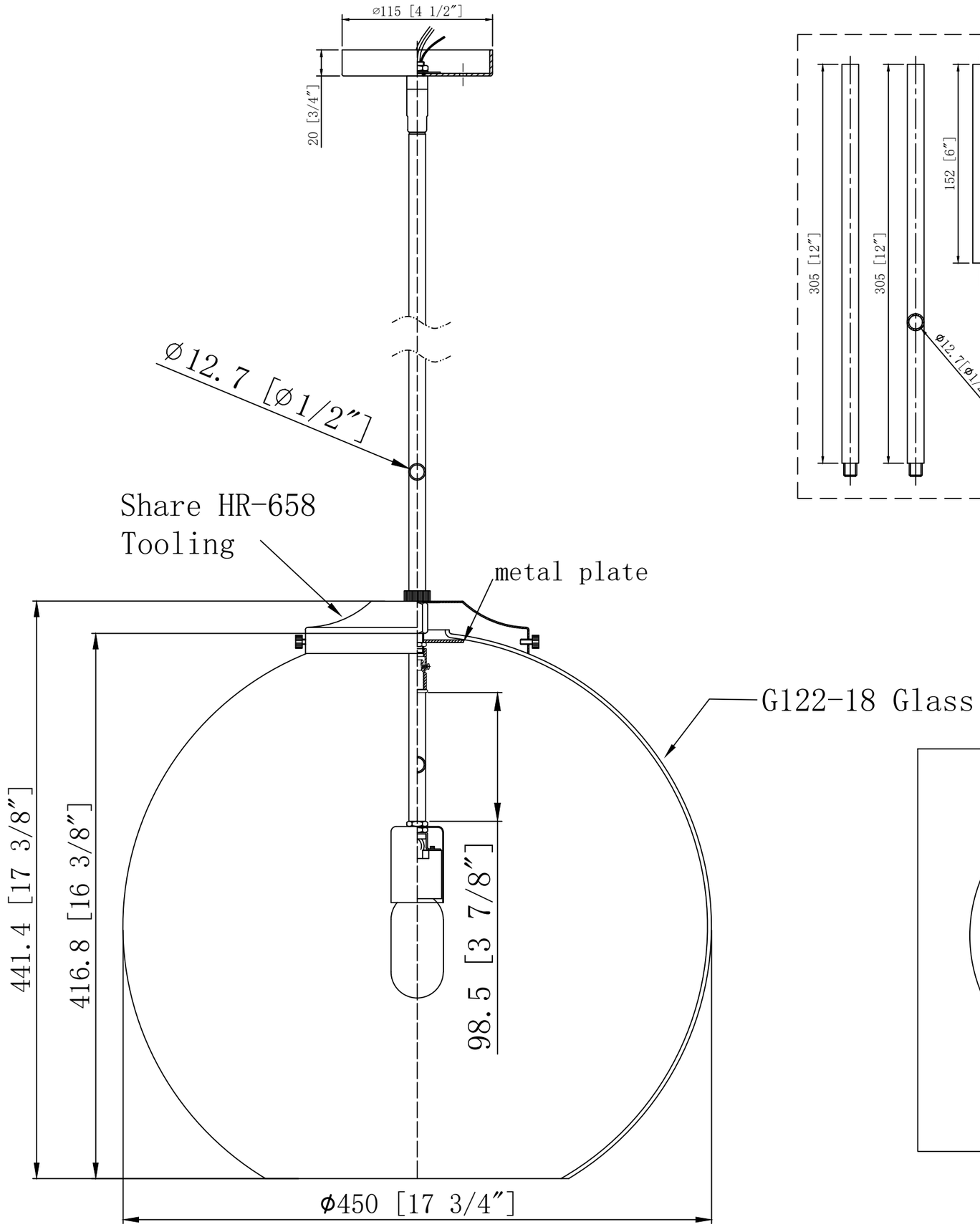

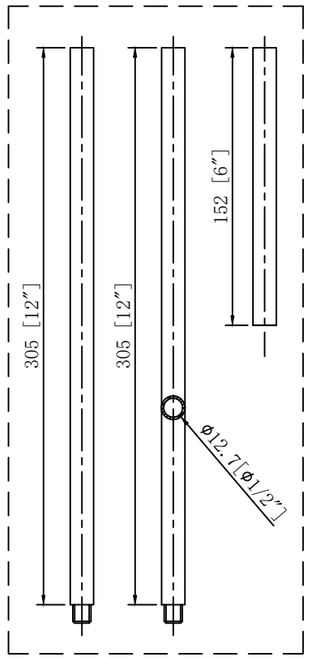

UL SPECIFICATION
* FIXTURE SHALL BE LISTED FOR LOCATION ONLY AND LABELED AS SUCH.
* FIXTURE MUST BE MANUFACTURED IN ACCORDANCE WITH UL STANDARD 1598.

PARTS SPECIFICATIONS

ITEM	QTY	DESCRIPTION
A	(1)	SOCKET- UL LISTED/CSA CERTIFIED BASE=MEDIUM SOCKET=PORCELIN SEE LEAD WIRE FOR SOCKET WIRE SPEC.
B	(1)	LEAD WIRE- 10FT FROM TOP UL LISTED/CSA CERTIFIED, AWG #18 105°C SPT-1 WIRE. STRIP 1/2 [12.7], SPLIT 3 [76.2]. FROM TOP OF SCROLL. (SEE CHART FOR COLOR).
C	(1)	GROUND WIRE- 10FT FROM TOP 1/4 LAY COPPER GROUND WIRE. FROM TOP OF SCROLL. (SEE CHART FOR TINT).

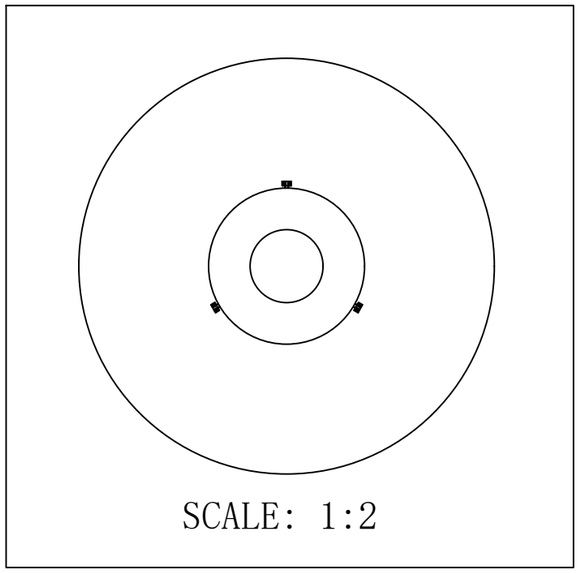

NO.	PART NO.	DESCRIPTION	REQ.

NOTICE: ANY DESIGN OR OTHER INFORMATION HEREON DEVELOPED BY THIS COMPANY IS CONFIDENTIAL MATERIAL AND EXCLUSIVE PROPERTY OF THE L.D. ALIYA CO. DISCLOSURE OR REPRODUCTION REQUIRES THE WRITTEN CONSENT OF THE L.D. ALIYA CO.

INNOVATIONS
CREATIVITY MEET.. EVOLUTIONARY DE..IGN

DRAWN IN THIRD ANGLE PROJECTION

"mm" DIMENSION INDICATED IN [ ]
DIMENSION IN [ ] IS FOR REF. ONLY

TOLERANCES (EXCEPT AS NOTED)

DECIMAL	ANGULAR	FRACTIONAL	SCALE
NONE ±.031 .X ±.015 .XX ±.010 .XXX ±.005	± 1/2°	± 1/32	1:4

DATE	DRAWN BY	CHECKED BY	APPROVED BY
18/09/2020	SSL	X	X

TITLE
1L 18" Globe Stem Pendant

PART NO. Pendant REV.

ITEM NO. 1L 18" Globe Stem Pendant REV. A