Summit™ Technical Specification

Paper Holder YB6309

Stock Numbers:

- ❑ **YB6309CH – Paper Holder**
  Chrome Finish
- ❑ **YB6309BN – Paper Holder**
  Brushed Nickel Finish
- ❑ **YB6309BL – Paper Holder**
  Black

Dimensions:

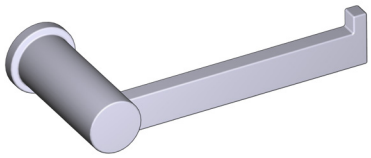

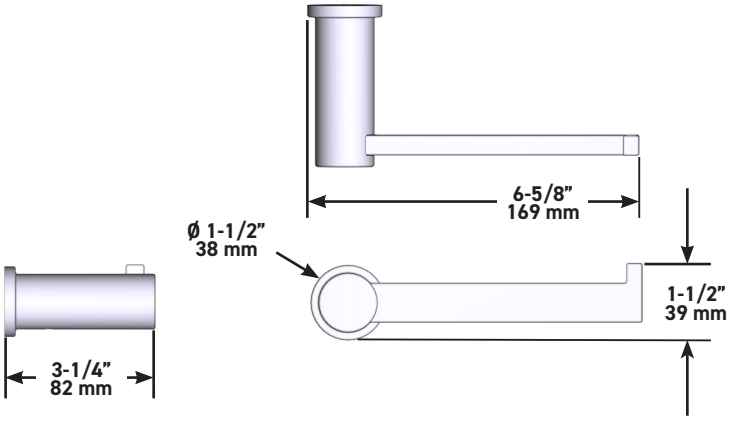

Materials:

Paper Holder is constructed of zinc

Installation Instructions:

1. Position the mounting template on the wall in the desired location.Using a level, align the template and tape it to the wall.
2. Remove the mounting post from the body by loosening the set screw.
3. Place mounting post on the template with notch facing down.
4. Mark the large hole locations of the mounting bracket.
5. Attach mounting bracket to the wall, using the wall anchors provided.
6. Mount base on the corresponding mounting bracket. Check and make surethat the base set screw hole(s) are facing down. Assemble a set screw tobase. Use the hex wrench included in hardware kit to tighten set screw andsecure the assembly to the mounting bracket(s).
7. Tighten all screws. Do not over tighten.
8. Place post over the mounting plate (set screw down). Tighten set screw.

Cleaning Instructions:

To preserve the fine finish of this product, clean only with a soft damp cloth.
Dry well. Do not use commercial or abrasive cleaners.

Stock Number:_____ Paper Holder

MOEN®

25300 AL MOEN DRIVE • NORTH OLMSTED, OH 44070
CORPORATE HEADQUARTERS: (800) 321-8809 • FAX: (800) 848-6636
INTERNATIONAL: (440) 962-2000 • FAX: (440) 962-2726
CUSTOMER SERVICE (USA): 800-882-0116 • FAX: (888) 379-2720
WWW.MOEN.COM
© 2021 Moen Incorporated. Moen is a registered trademark and Summit is a trademark of Moen Inc.

11/02/2021 SPC2415 500004772A
Rev.Date:04/10