PIONEER FAUCETS
STYLE THAT WORKS

3DM200
Del Mar SERIES

Two Handle Lavatory Widespread Faucet
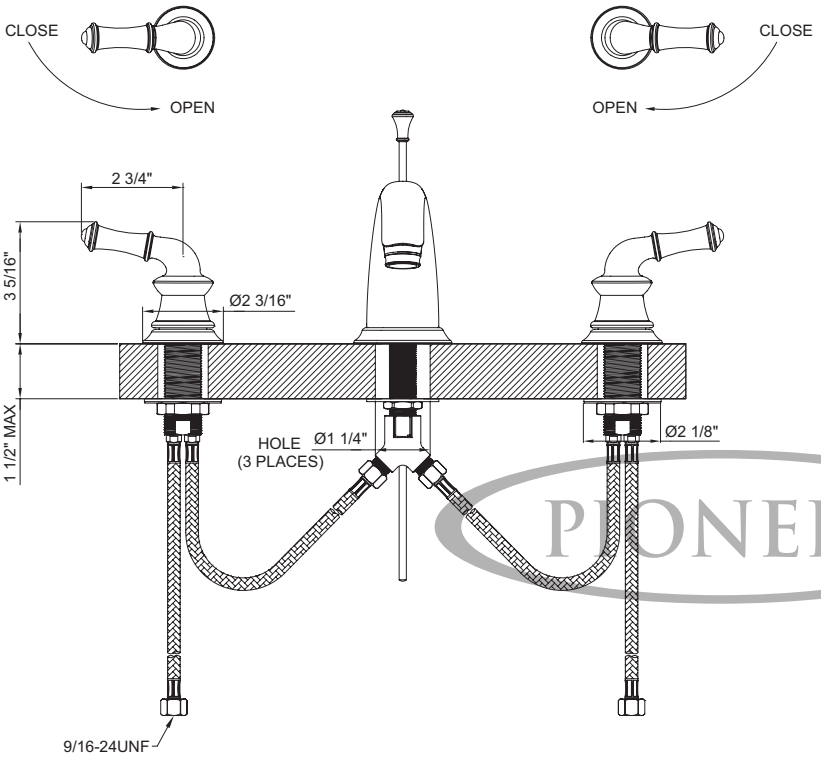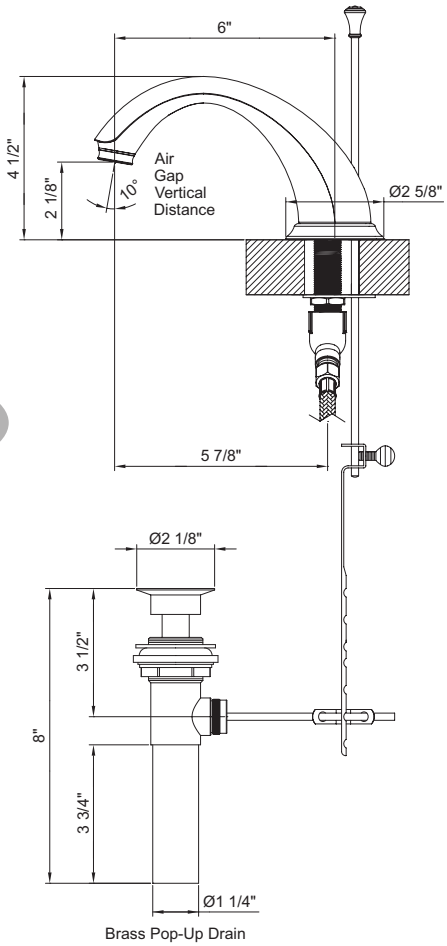
- Metal Lever Handles
- Rigid C Style Spout
- 5-7/8" Reach, 2-1/8" from Deck to Aerator
- Ceramic Disc Cartridges
- 3-Hole 6" to 16" Installation
- Brass Pop-Up Drain Assembly
- With 1.2 GPM Flow Rate