Pioneer Faucets
STYLE THAT WORKS

T-4MT201
Motegi Series

Single Handle Tub Trim Set

- Metal Lever Handle
- Ceramic Disc Cartridge with Temperature Limit Cap
- Combo 1/2” IPS/Slip-On Tub Spout With Escutcheon, 7” Spout Reach
- For Use with V-2300B Or V-2400B Series Valves - Valve not included

Code and Standards

- ASME A112.18.1-2018/CSA B125.1-18
- ADA: Compliance to ICC/ANSI A117.1 (Lever Handle Only)
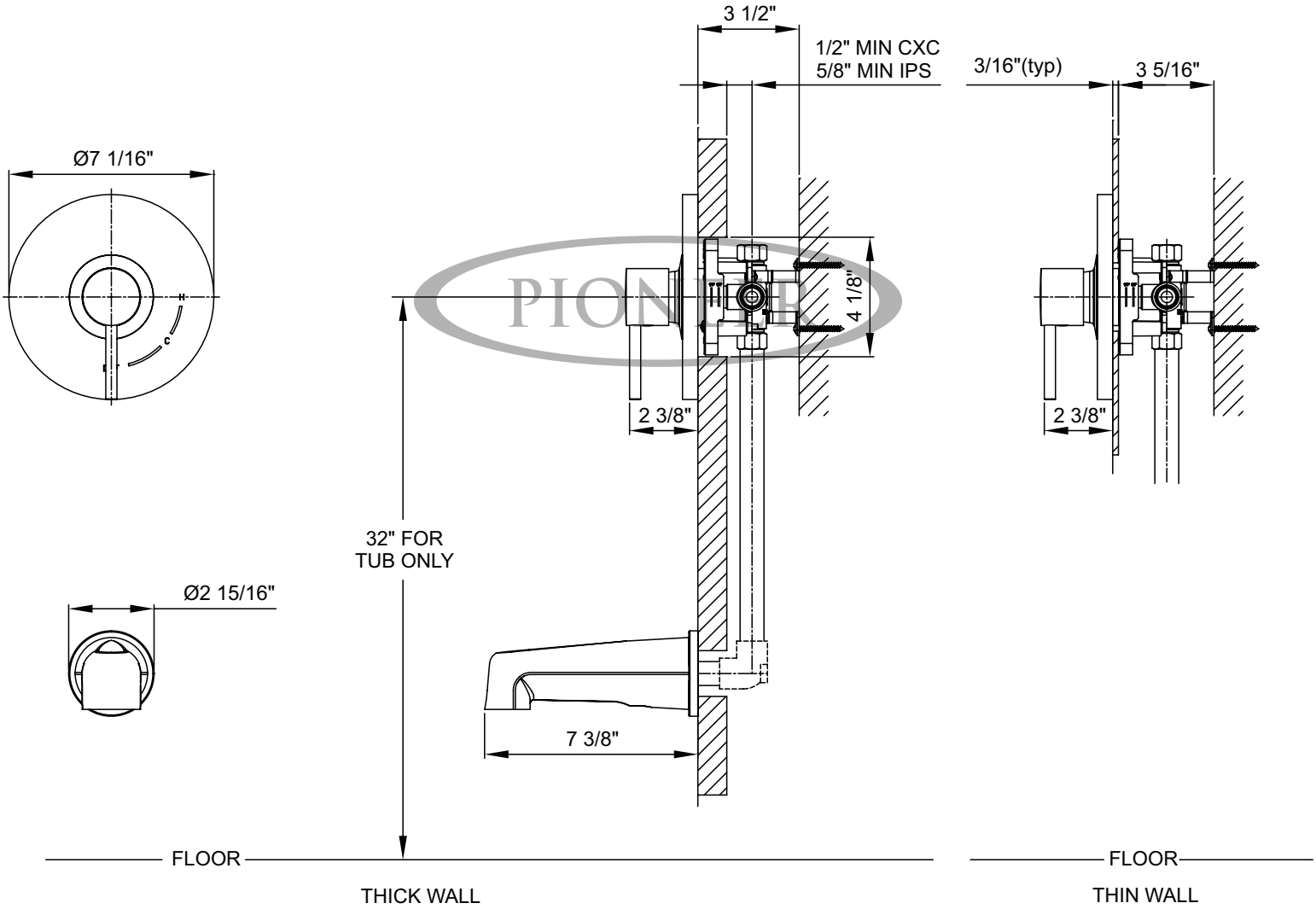
*For other finishes and flow rates offered, please visit our website, email an inquiry to sales@pioneerind.com or contact our sales at 800-338-9468